# Statistical Genetics

## Lecture 1

## Basic Genetics Review / Mendelian Genetics

# Lecture 1 Readings

- **Pahlke, F. (2010). Training in Genetic Epidemiology (www.wiley-vch.de/home/geneticepidemiology): Chapter 2**

- **Zieger, A. & Konig, I.R. (2010). A Statistical Approach to Genetic Epidemiology: Chapter 1 & 2**

# Basic Genetics Review

(slides courtesy of K. North, PhD. UNC-Chapel Hill, USA)

# DNA – Deoxyribonucleic Acid

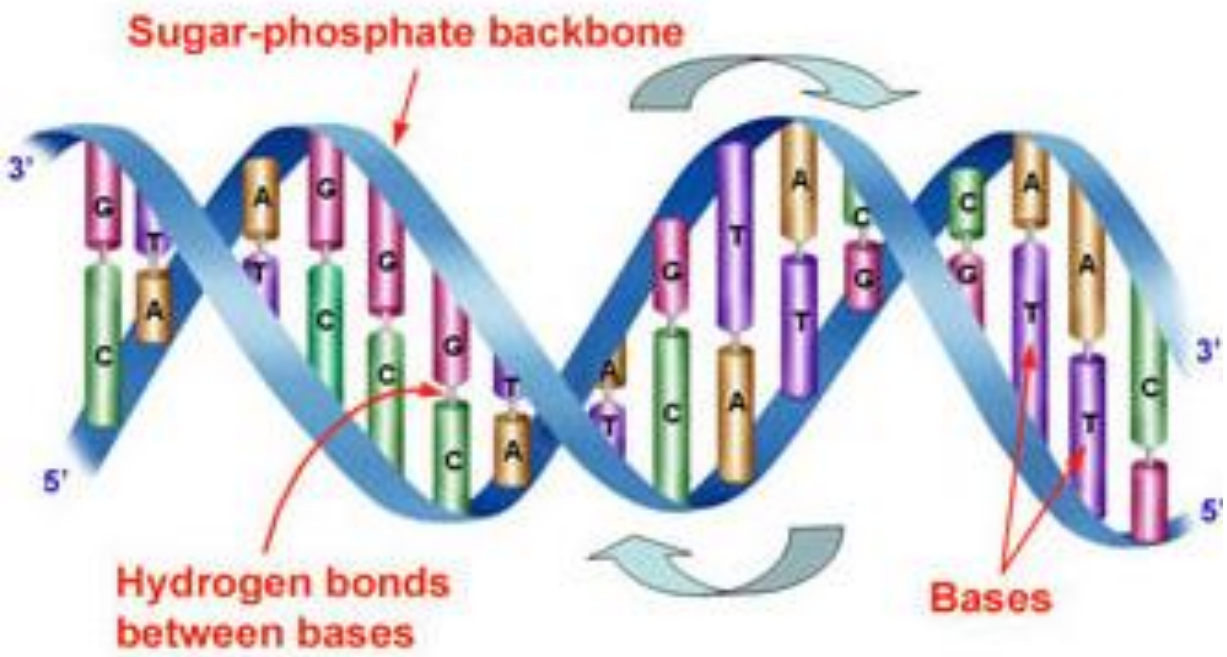


- Housed in the nucleus of the cell, carries the instructions that allow cells to make proteins
- Carries an individual's genetic information
- Composed of a sugar phosphate backbone from which four nitrogenous bases- adenine (A), guanine (G), cytosine (C), and thymine (T), protrude
- Arranged in a double helix: two strands are held together by specific pairings between bases A – T pair and G – C pair

# DNA – Deoxyribonucleic Acid

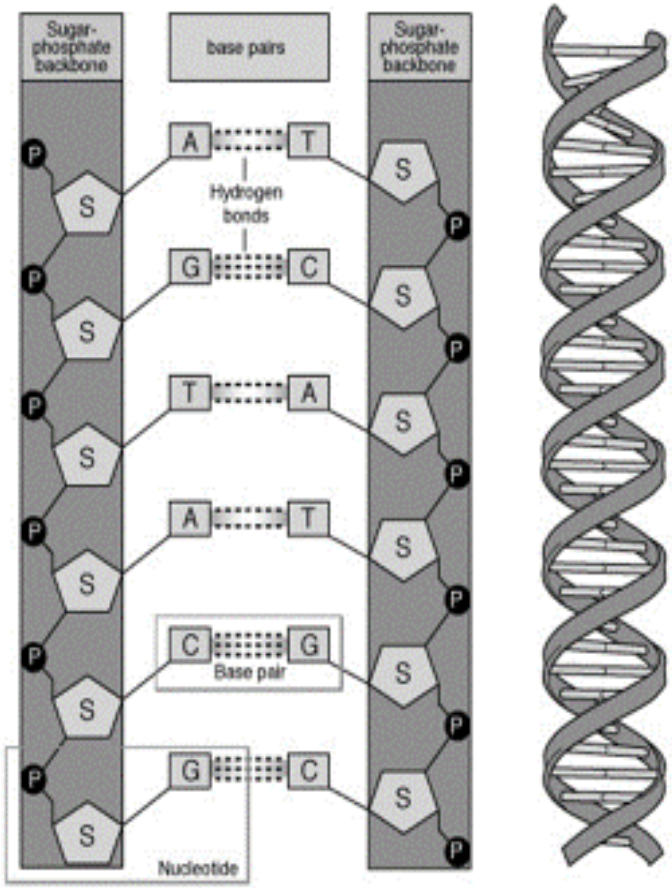

# Chromosomes

- Structures within the nucleus of a cell that carry the DNA and proteins
- Each chromosome (chr) contains a single, long DNA molecule
- Short arm: p arm (for the French word petit); long arm: q arm
- Centromere: separates the two arms
- Telomere:  ends of a chromosome
- chr occur in pairs (23 for humans and 39 for dogs)

# Chromosome 3

Telomere

p arm

Centromere

q arm

Telomere

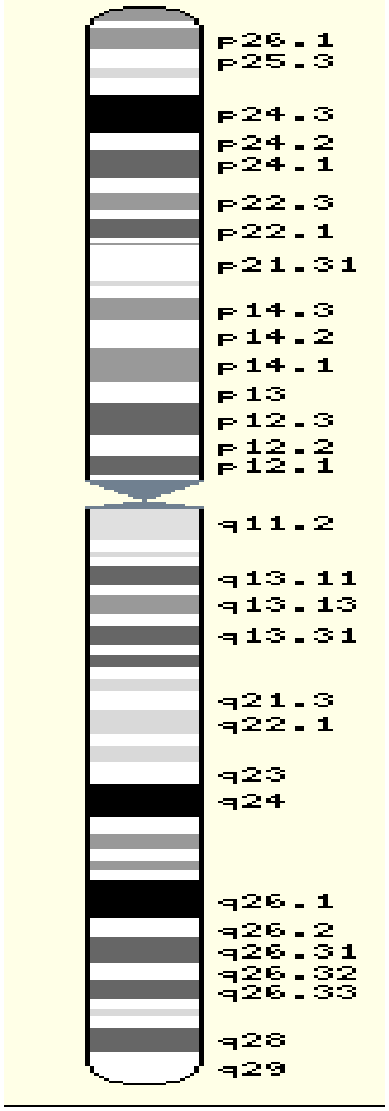


**On the p arm, numbering begins at the centromere and increase towards the telomere.**

**On the q arm, numbering begins at the centromere and increase towards the telomere.**

# Ploidy

**Table 1:** Total Number of Chromosomes in the Cells

| Name | Diploid Number |
|---|---|
| Human | 46 |
| Monkey | 42 |
| Dog | 78 |
| Cat | 38 |
| Mouse | 40 |
| Frog | 26 |
| Fruit Fly | 8 |
| Corn | 20 |
| Potato | 48 |
| Green Algae | 20 |

# Genes

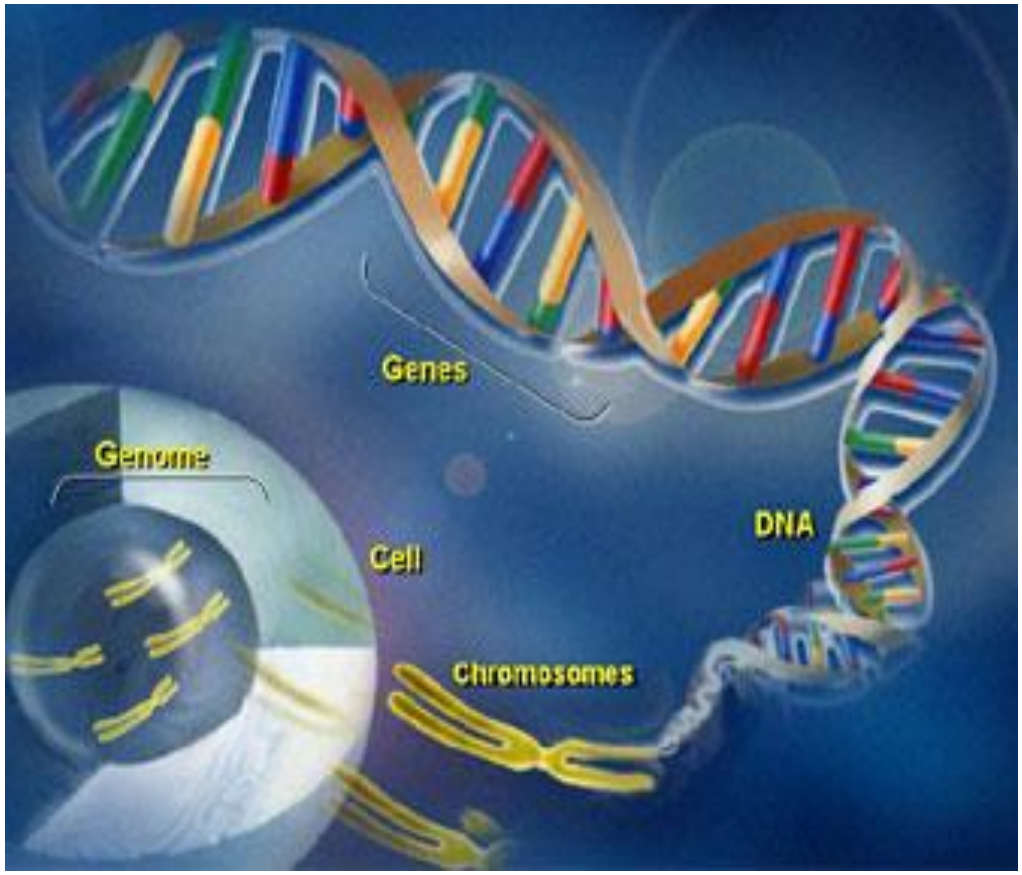


- Are the unit of heredity
- Are the instructions that make up a body's blueprint
- Code for the proteins and mRNA that determine virtually all of a person's characteristics
- Humans have between 20,000 and 30,000 genes
- Genes occur at different sites or "loci" along a chr and occupy about 3% of the entire DNA

# Alleles are alternative forms of a gene

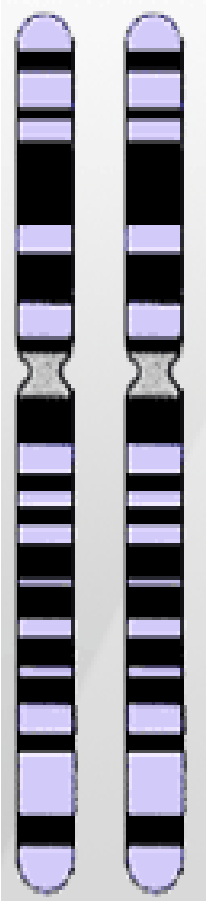

allele G:
GACTCCTGAG

allele g:
GACTCCTGTG

Chromosome 11

- Alleles are represented by different DNA codes
- Humans have two copies (or alleles) of all of their autosomal genes
- Homozygote: carries same alleles of a specific gene
- Heterozygote: carries two different alleles of a specific gene
- Genetic variation is caused by changes in the DNA code

e.g., different pea pod colors (green vs. yellow) are caused by different alleles for the same gene

# Phenotype and Genotype

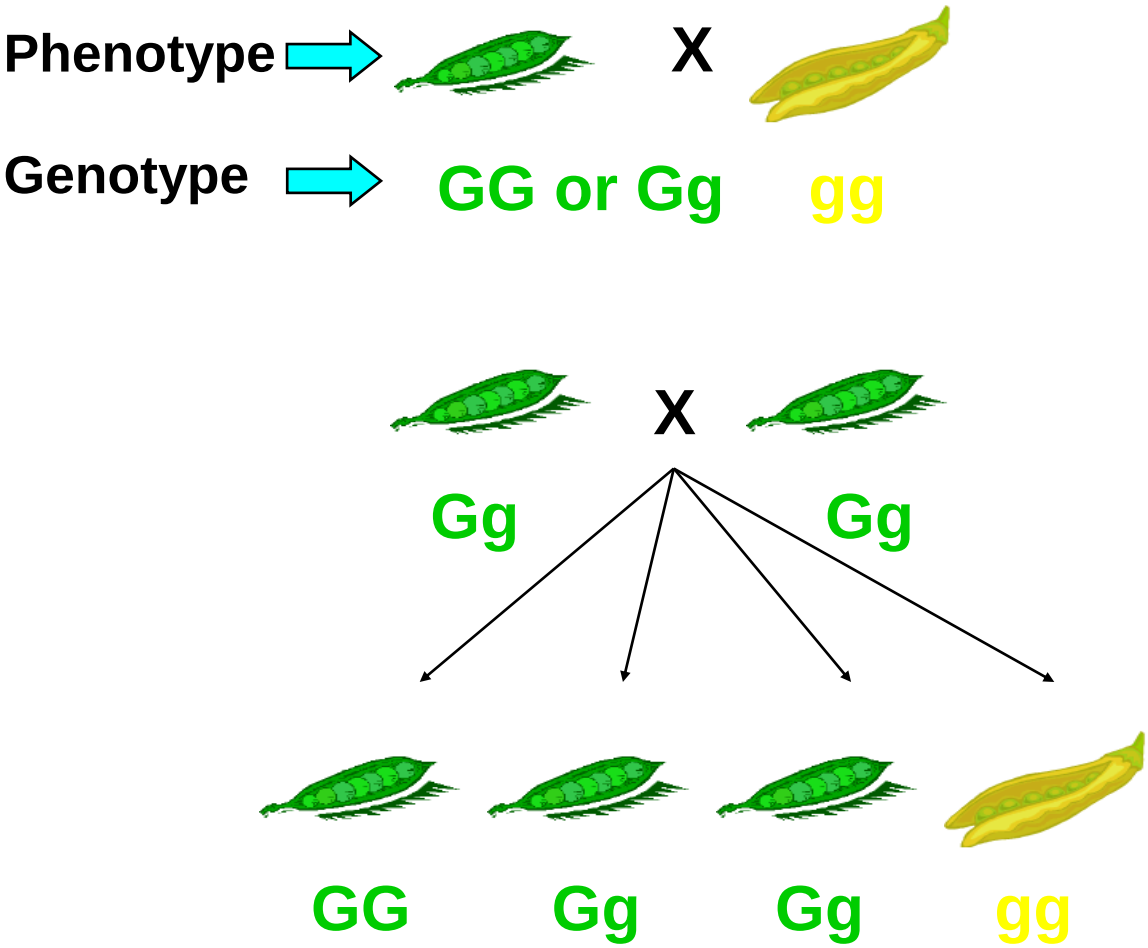


**<u>Phenotype</u> is the observable or measurable trait of the organism (physical, behavioral, or biochemical, etc.)**

**<u>Genotype</u> is the genetic identity of the organism across the genome. Here we show the genotypes at one particular diallelic locus (k(k+1)/2 for k alleles)**

# Genotypes: Heterozygote and Homozygote

- ***Heterozygote:*** **individual with two different alleles at a locus (or gene)**
  - **Using the pea-pod color as an example, the Gg genotype is a heterozygote**
- ***Homozygote:*** **individual with two identical alleles at a locus (or gene)**
  - **Using the pea-pod color as an example, the GG or gg genotypes are homozygotes**

# Phenotype and Genotype

**Phenotypic differences can be caused by allelic variation at:**

| | | |
|---|---|---|
| **Single locus** | **=** | **monogenic** |
| **Few loci** | **=** | **oligogenic** |
| **Many loci** | **=** | **polygenic** |
| **Any above + environment** | **=** | **multifactorial** |

***Multifactorial* - determined by multiple genetic and/or nongenetic factors; literally, "many factors"**

**The term *polygenic* is generally used to describe multiple factors that are exclusively genetic, though it can also be used in connection with a specific type of model involving multiple genetic factors with particular types of effects, e.g., the simple additive polygenic model (on a particular scale)**

# Human Genetic Variation

**Primarily two types of genetic mutation events create all forms of variations:**

- **Single base mutation which substitutes one nucleotide for another**
  - **-- Single Nucleotide Polymorphisms (SNP)**

- **Insertion or deletion of one or more nucleotide(s)**
  - **--Tandem Repeat Polymorphisms**
  - **-- Insertion/Deletion Polymorphisms**

# Mutations

**Allelic variations that are associated with disease or trait phenotypes are often called mutations**

**Mutations are the ultimate source of all genetic variation**

# Polymorphism

- Implies genetic variation at a designated locus
- A locus that is polymorphic has at least two alternative alleles
- More specific definition (not universally accepted)- the existence of two or more genetic variants (alleles, sequence variants, chromosomal structure variants) at significant frequencies in the population

# Single Nucleotide Polymorphisms (SNPs)

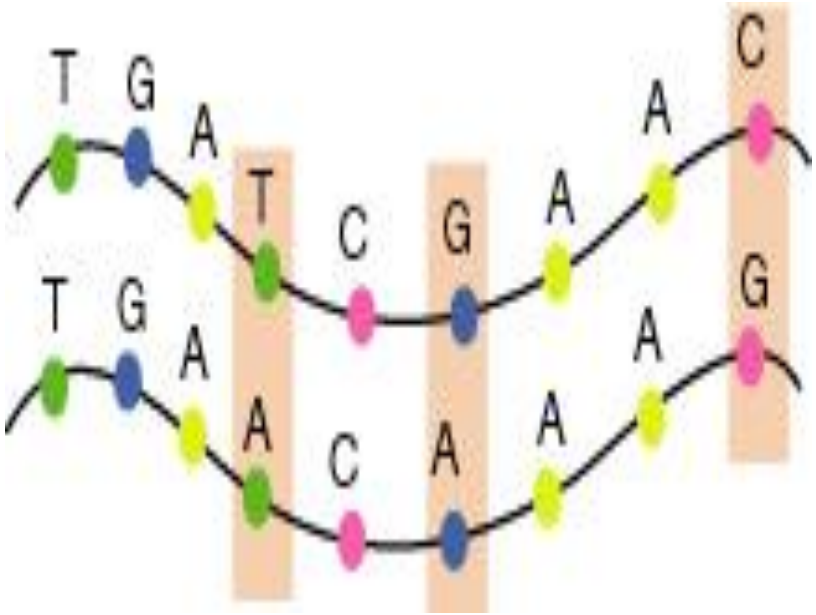


- **Single nucleotide polymorphisms ( SNPs) are DNA sequence variations that occur when a single nucleotide (A,T,C,or G) in the genome sequence is altered**
- **For a variation to be considered a SNP, it usually occurs in at least 1% of the population**

# SNPs and Mutations

**Terminology for variation at a single nucleotide position is defined by allele frequency(proportion).**

- **A single base change, occurring in a population at a frequency of >1% is termed a single nucleotide polymorphism (SNP).**

- **When a single base change occurs at <1% it is considered to be a mutation.**

# Tandem Repeat Polymorphisms

Tandem repeats or variable number of tandem repeats (VNTR) are a very common class of polymorphism, consisting of variable length of sequence motifs that are repeated in tandem in a variable copy number.

VNTRs are subdivided into two subgroups based on the size of the tandem repeat units.

- Microsatellites or Short Tandem Repeat (STR)
  repeat unit: 1-6 (dinucleotide repeat: CACACACACACA)
- Minisatellites
  repeat unit: 14-100

**Examples**:

Spinocerebellar ataxia Type10 (*SCA10*) (OMIM:**603516**) is caused by largest tandem repeat seen in human genome. Normal population has 10-22 ATTCT repeats in intron 9 of SCA10 gene; where as *SCA10* patients have 800-4500 repeat units, which causes the disease allele up to 22.5 kb larger than the normal one.

Fragile X syndrome: caused by a CGG repeat in the coding region of the FMR1 gene. Normal: <40 repeats. Premutation: <200 repeats. Affected: >200 repeats.

# Short Tandem Repeats (STRs)

***The repeat region is variable between samples while the flanking regions where PCR primers bind are constant***

# STR / Microsatellite

- STRs consist of small simple-sequence (e.g. di-, tri-, or tetranucleotide) repeats, which can be detected by PCR with primers
- Typically repeat a total of~5 to 30 times
- Most commonly is (CA) repeat
- Many alleles, more informative than others
- Distributed throughout genome

# STR / Microsatellite, cont.

- D15S650 (D = DNA, 15 = chromosome 15, S = single copy, 650 = 650$^{th}$ system described on chr 15)
- Alleles indicate the type of repeat, i.e. alleles 136, 139, 142 = trinucleotide repeat
- Problem – high mutation rate $10^{-2}$ to $10^{-6}$ events per locus per generation
- Problem – technical genotyping problems common
- Used less often nowadays as genetic markers

# Two Main Types of Microsatellites . . .

**Tetranucleotide repeat:**

**Paternal allele**

AACTAACTAACTAACT
TTGATTGATTGATTGA

→ **4 repeats**

**Maternal allele**

AACTAACT
TTGATTGA

→ **2 repeats**

**Dinucleotide repeat:**

**Paternal allele**

CACACACACACACACA
GTGTGTGTGTGTGTGT

→ **8 repeats**

**Maternal allele**

CACACA
GTGTGT

→ **3 repeats**

# Use for microsatellites: Paternity Testing

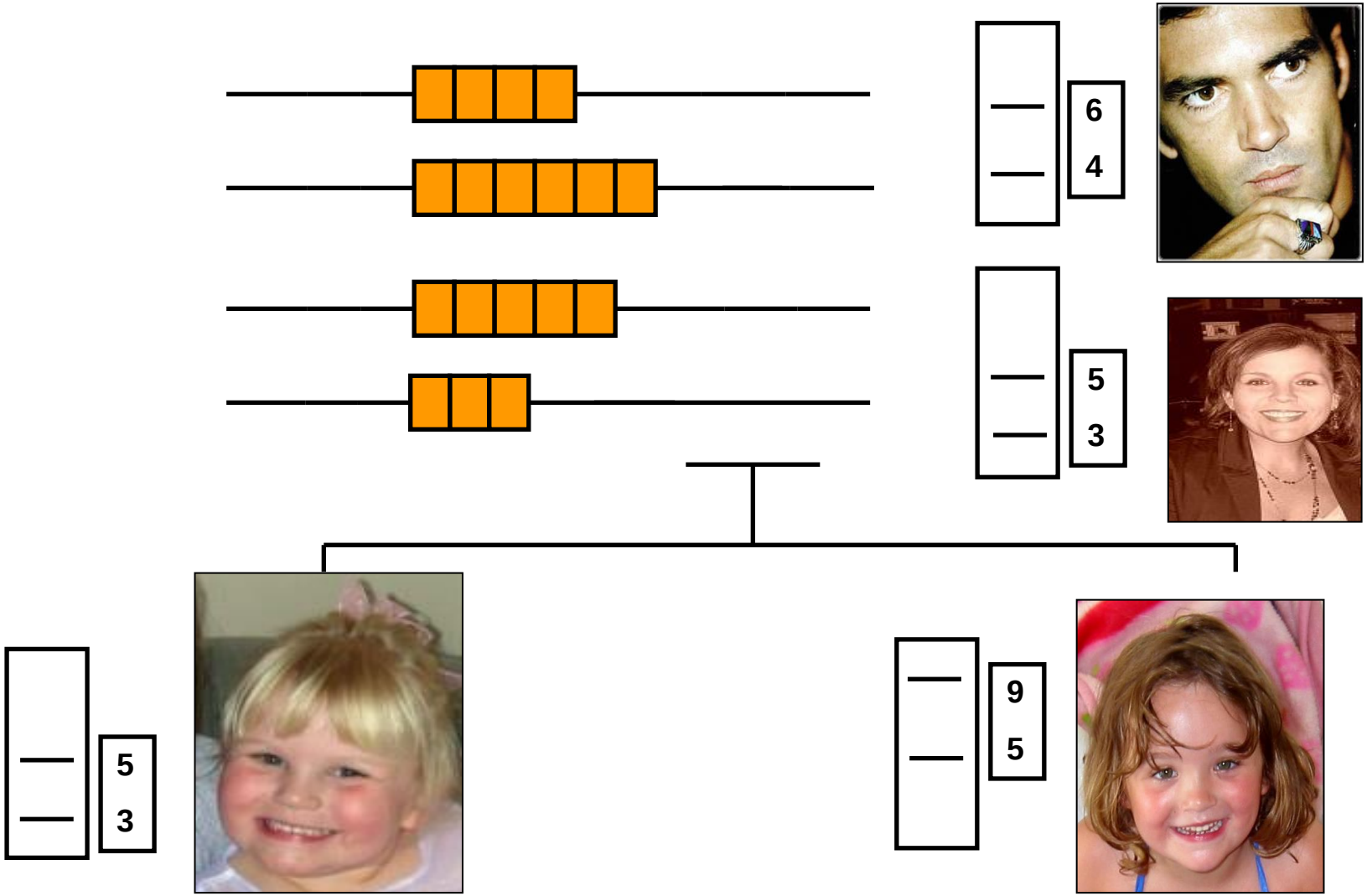

# Copy Number Variants

**Human genomes vary at multi-kilobase as well as single-nucleotide scales (Lafrate et al., Nature Genetics 2004; Sebat et al., Science 2004)**

**Defined as variation in copy number of genomic segments 1-500 kb in size**

# Common misconceptions about copy number variation

- **Copy number variation is vast -- large (>50 kb) CNVs reported to influence 15-18% of the human genome, greatly exceeding SNP variation**
  - **Redon *et al., Nature* 2007**
  - **Database of Genomic Variants**

- **CNVs are mostly rare and reflect recent, recurring mutations**
  - **Jakobsson *et al., Nature* 2008**

# Common misconceptions about copy number variation- McCarroll et al.

- **Copy number variation is vast -- large (>50 kb) CNVs reported to influence 15-18% of the human genome, greatly exceeding SNP variation**
  - ***Our finding: Any two individuals differ at less than 0.3% of their genomes due to large CNVs***
- **CNVs are mostly rare and reflect recent, recurring mutations**
  - ***Our finding: More than 90% of copy-number variation among normal individuals is due to a limited set of common polymorphisms that reflect ancestral mutations***
- **Also– recent evidence shows that ~60% of CNV's are highly correlated with known SNP variation.**

# Human Genetic Variation: Genetic Markers

- Used to mark or “track” sections of DNA from parent to child or to compare sections of DNA from individual to individual
- A gene or other segment of DNA with an identifiable physical location on a chromosome and whose inheritance can be followed
- A variable DNA sequence that can be localized to a single genomic locus
- Can identify differences between individuals and between homologous chromosomes in an individual
- Genetic markers have a pivotal role in gene mapping
- Sequence variations at genetic markers are not usually functional, (but may be correlated with functional variants)

# Genetic Markers: Desirable Qualities

- Heritable
- Low mutation frequency (so it will be passed from generation to generation without alteration)
- Codominant inheritance (all genotypes are distinguishable)
- Hardy Weinberg Equilibrium (HWE)
- Polymorphic (the more variants and the higher the proportion of heterozygotes there are, the better)

# Mendelian Genetics

# Pedigrees are Pictorial Representations of the Family Tree

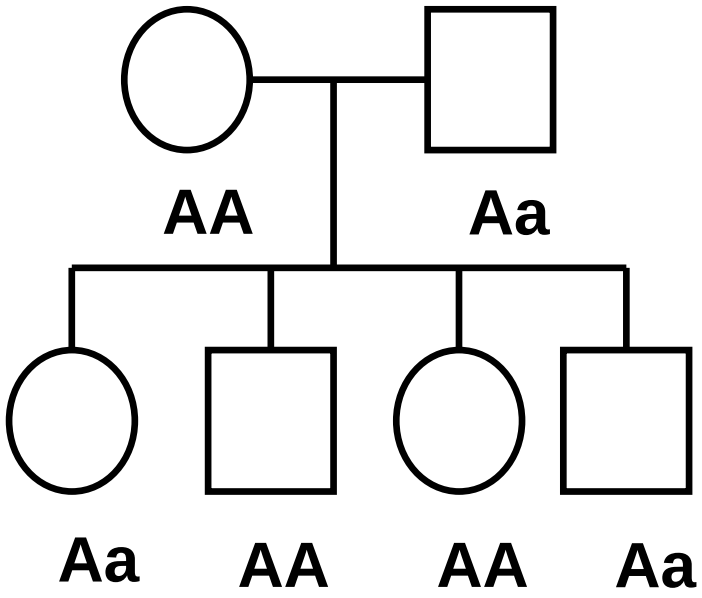


- **The biological relationships are indicated in the symbols and how they are drawn**
  - **Each generation is represented by a row**
  - **Horizontal lines join individuals who have children together**
  - **Vertical lines connect their children to them**

# Pedigree Construction: Symbols

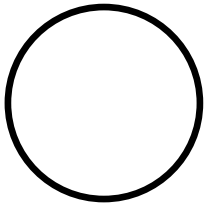

= Female

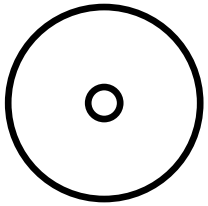

= Female carrier for X-linked trait

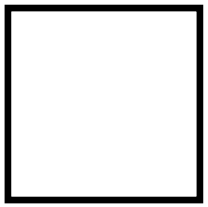

= Male

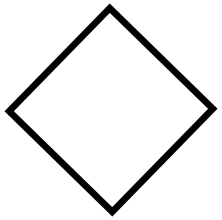

= Unknown sex

= Affected Female, Male

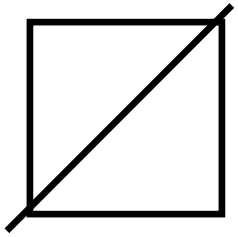

= Deceased Male

# Johann Gregor Mendel (1822-1884)

- Augustinian monk working in country presently known as Czech Republic
- Studied plant hybridization for 8 years
  - Cross pollination of common varieties of sweet pea (color, shape, size, and form of sea pod)
  - Lucky he chose traits of simple inheritance, each on their own chromosome

# Mendel (1822-1884)

- Hypothesized that an organism's characteristics were inherited as discrete units or elements and not through blending of parental traits
- In 1864 began to disseminate findings
- Mendel's work was unrecognized during his lifetime
  - In 1900 three independent botanical researchers uncovered his work (deVries, Correns, and Tschermak)

# Example – ABO Blood Group

- **Based on antigens on the surface of red blood cells**
- **Chromosome 9.**
- **Alleles: A, B, O  A = A antigen; B = B antigen; O=neither**
- **<u>Genotype</u>  <u>Phenotype</u> (blood group, monogenic)**

| Genotype | Phenotype |
|---|---|
| AA, AO | A |
| BB, BO | B |
| AB | AB |
| OO | O |

- **Genotypes consisting of two copies of the same allele are homozygous. Examples AA, BB, OO**
- **Genotypes consisting of two different alleles are heterozygous. Examples: AB, AO, BO**

# Dominant - Recessive

- **When a heterozygous genotype has distinguishable phenotype from both homozygous genotypes, the alleles are *codominant***
  - **Example: ABO Blood Group; *A* and *B* are codominant**
  - **(AB genotype results in unique phenotype)**
- **When a heterozygous genotype results in the same phenotype as a corresponding homozygous genotype, the allele is *dominant*.**
  - **Example:**
  - **AA, AO result in blood group A.**
  - **BB, BO result in blood group B.**
  - **A and B are *dominant* to O.**
  - **Equivalently, O is *recessive* to A and B.**

# Mendel's Law Continued

**Heterozygous cross: MNxMN**
**Example: MN blood group**
**(another codominant locus)**

| maternal→<br><br>paternal | M | N |
|---|---|---|
| M | MM | MN |
| N | MN | NN |

# Mendel's Laws

- ***Law of Independent Segregation***
  - ***Inheritance is particulate***
- **Law of Independent Assortment**
  - **Genes sort independently**

**Meiosis (specialized cell division that takes place when sex cells -- gametes -- are produced ) is the basis for Mendel's Laws of Inheritance**

**Mendel's laws are probability models**

# Mendel's Law of Independent Segregation

- **Inheritance is particulate**
- **During the formation of gametes (eggs or sperm), the two alleles responsible for a trait separate from each other.**

# F1 Offspring

| | Parents | F1 Offspring |
|---|---|---|
| Genotype = | GG * gg | 100% Gg |
| Phenotype = | Green * Yellow | 100% Green |

# Punnett Squares

Green Pod Parent

(GG)

Yellow Pod Parent (gg)

| Alleles for Yellow Parent | G | G |
|---|---|---|
| g | Gg | Gg |
| g | Gg | Gg |

Alleles for Green Pods

# Mendel's Law of Independent Segregation

**Green Pod Parent (Gg)**

**Green Pod Parent (Gg)**

| | G | g |
|---|---|---|
| G | Green GG | Green Gg |
| g | Green Gg | *Yellow gg* |

**Note: Mendel's laws are probability models– not deterministic.**

**GgxGg→ each offspring has a ¼ *chance* of being yellow. Or: if you had a zillion pods, you would expect ¼ to be yellow, on average.**

# Mendel's Law of Independent Segregation

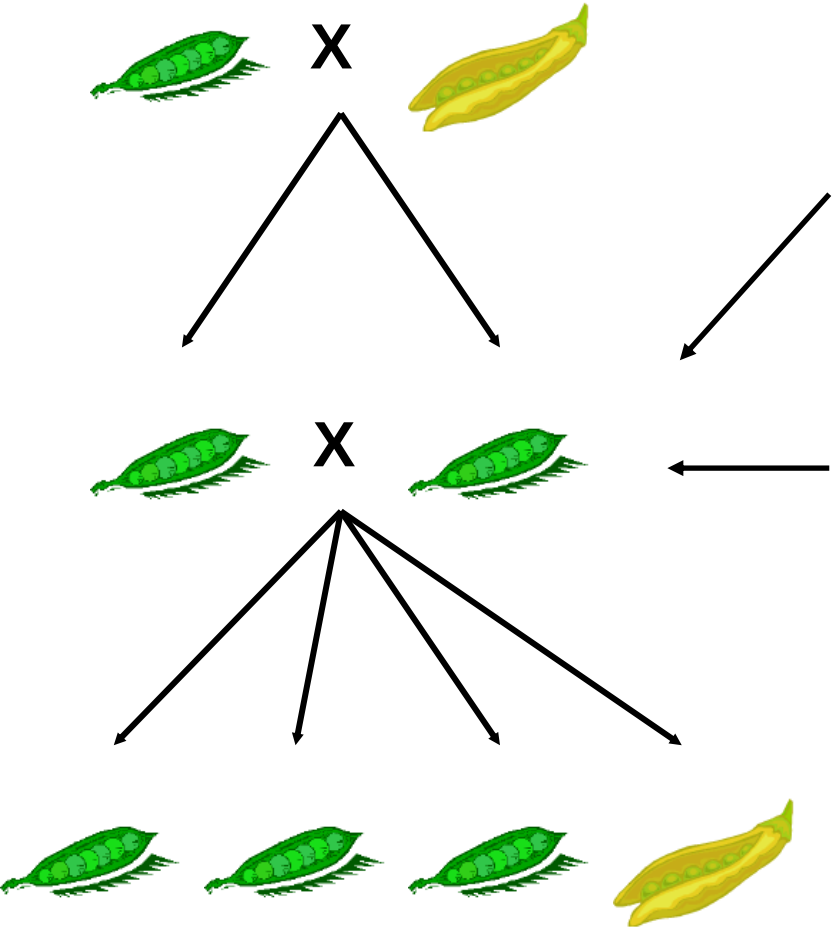


**Parent Pea Plants (Two Members of F1 Generation)**

**Genotypes:**

**Gg x Gg**

**Phenotypes:**

**green x green**

**Offspring (F2 Generation)**

**Genotypes: 25% GG, 50% Gg, 25% gg**

**Phenotypes: 75% green , 25% yellow**

# Mendel's Laws, cont.

- **Law of Independent Segregation**
  - **Inheritance is particulate**
- ***Law of Independent Assortment***
  - ***Genes sort independently***

**Meiosis is the basis for Mendel's Laws of Inheritance**

# Mendel's Law of Independent Assortment

- **Alleles for different traits sort independently**
- **Alleles for different traits are distributed to sex cells (& offspring) independently of one another**

# Mendel's Law of Independent Assortment

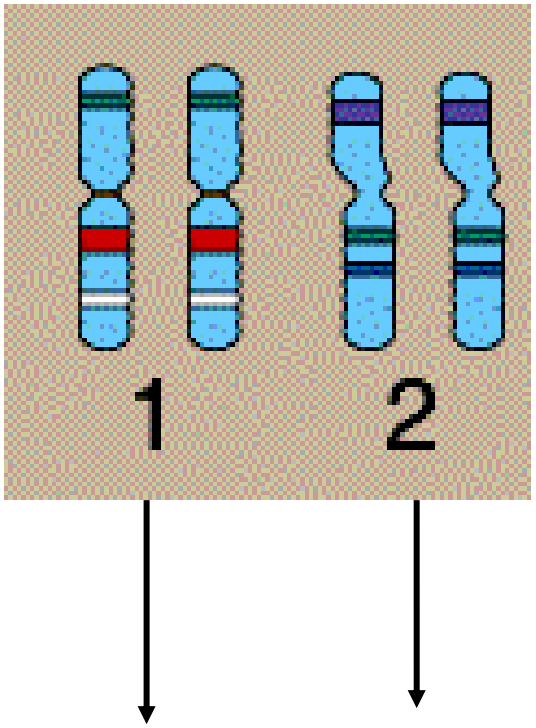


Gene for seed size on chromosome 1

Gene for pod color on chromosome 2

**Notice that we are dealing with two different traits: (1) seed size [ tall (AA, Aa) or short (aa) ] & (2) pod color [ green (GG, Gg) or yellow (gg) ], inherited on different chromosomes**

# Mendel's Law of Independent Assortment

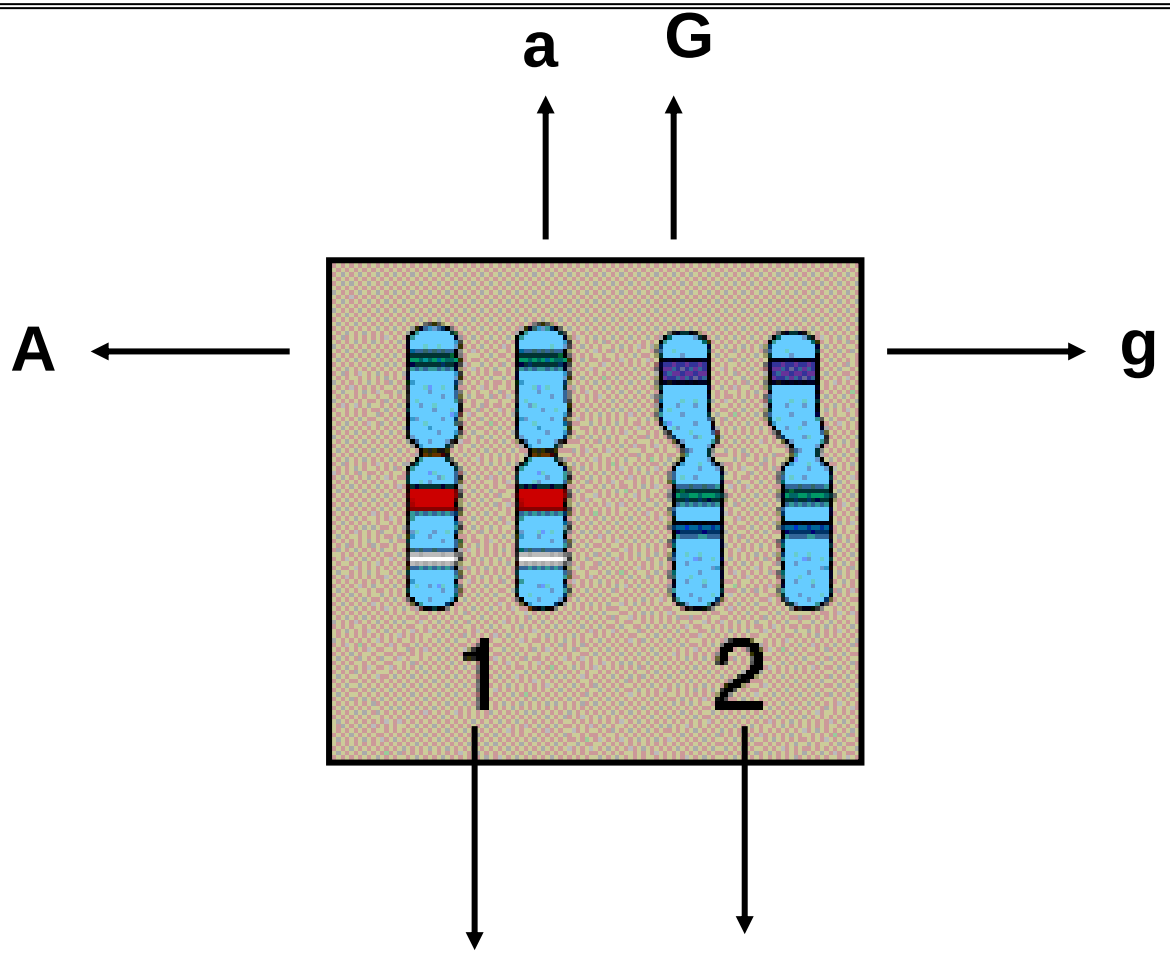


Gene for seed size on chromosome 1

Gene for pod color on chromosome 2

# Mendel's Law of Independent Assortment

**F1 cross: GgAa x GgAa**

**Possible Gametes for two traits sorting independently:**

**GA, Ga, gA, ga**

| | GA | gA | Ga | ga |
|---|---|---|---|---|
| GA | GGAA Tall | GgAA Tall | GGAa Tall | GgAa Tall |
| gA | GgAA Tall | ggAA Tall | GgAa Tall | ggAa Tall |
| Ga | GGAa Tall | GgAa Tall | GGaa Short | Ggaa Short |
| ga | GgAa Tall | ggAa Tall | Ggaa Short | ggaa Short |

**9 Green / Tall**

**3 Green / Short**

**3 Yellow / Tall**

**1 Yellow / Short**

# Mendel's Law of Independent Assortment

**The results from a dihybrid cross are always the same:**

- **9/16 boxes (offspring) show dominant phenotype for both traits (tall & green)**
- **3/16 show dominant phenotype for first trait & recessive for second (tall & yellow)**
- **3/16 show recessive phenotype for first trait & dominant form for second (short & green)**
- **1/16 show recessive form of both traits (short & yellow)**

# Mendel's Law Continued

- Mendel II allows us to extend this sort of calculation to multiple (unlinked) loci
- Example: MN and ABO Blood Group

Dad Mom

MN AB x MN AB

|

?

Pr(MM AB) = Pr(MM)xPr(AB) = (1/4)x(1/2) = 1/8

Pr(MM BB) = Pr(MM)xPr(BB) = (1/2)x(1/2) = ¼

i.e., since the MN and ABO blood group genes are transmitted independently of one another, we can simply multiply the individual probabilities to obtain joint probabilities.

# Mendelian Modes of Inheritance

**Autosomal Dominant**

**Autosomal Recessive**

**X-linked Recessive**

**X-linked Dominant**

**Y-linked**

- **Inheritance patterns describe how a disease is transmitted in families**
- **These patterns help to predict the recurrence risk for relatives**

# Autosomal Dominant Inheritance

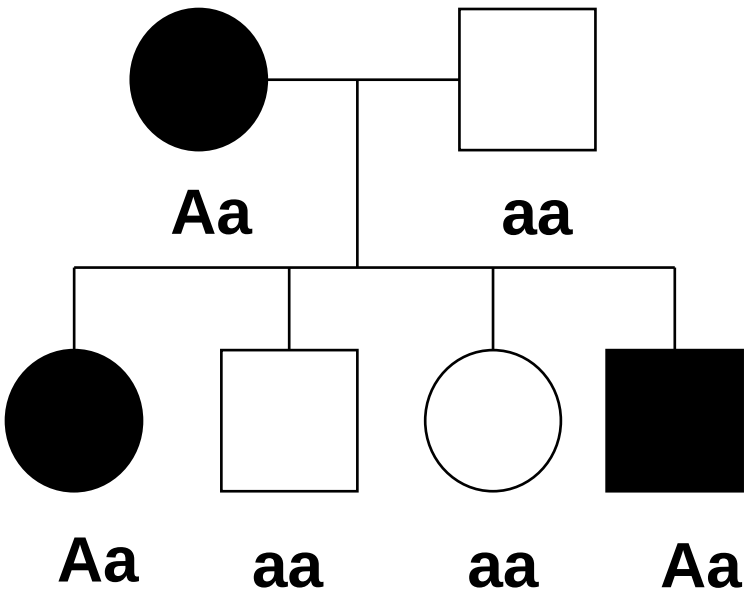


- A single copy of an allele is sufficient to cause expression of a trait
- Phenotype is expressed in the heterozygote and homozygote
- Affected individuals have at least one affected parent
- In a population, males and females are equally at risk
- Each pregnancy has a 50% risk of inheriting the gene

# Example: Osteogensis Imperfecta (Type1)

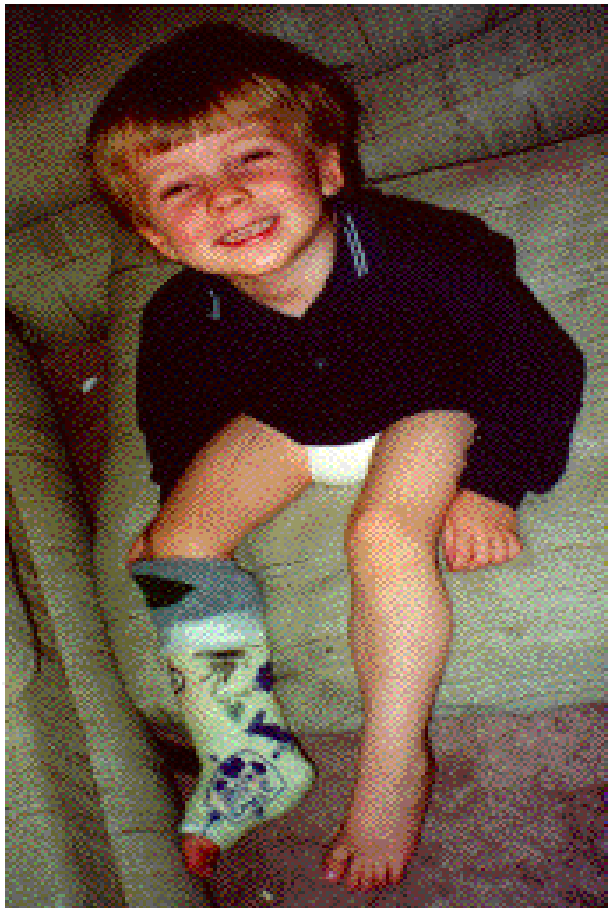

JoJo Sturm, age 4

- **Mutations affecting a protein chain [alpha $_1$(I)] lead to deficient production of type I collagen**
- **Marked by extreme fragility of bones**

# Other Examples of "Common" Autosomal Dominant Traits

- **Familial hypercholesterolemia -- 1/500**
  - **Homozygote = 1/1,000,000 (more severe)**
  - **Results in elevated LDL cholesterol and increased risk of CAD**
- **Huntington's disease ~ 1/10,000**
  - **Associated with neuronal cell death and dementia**
- **Ehlers-Danlos variants ~1/5,000-1/10,000**
  - **Associated with a proneness to spontaneous rupture of bowel or large arteries**
- **Achondroplasia ~1/12,000**
  - **most frequent form of short-limb dwarfism**

# Autosomal Recessive

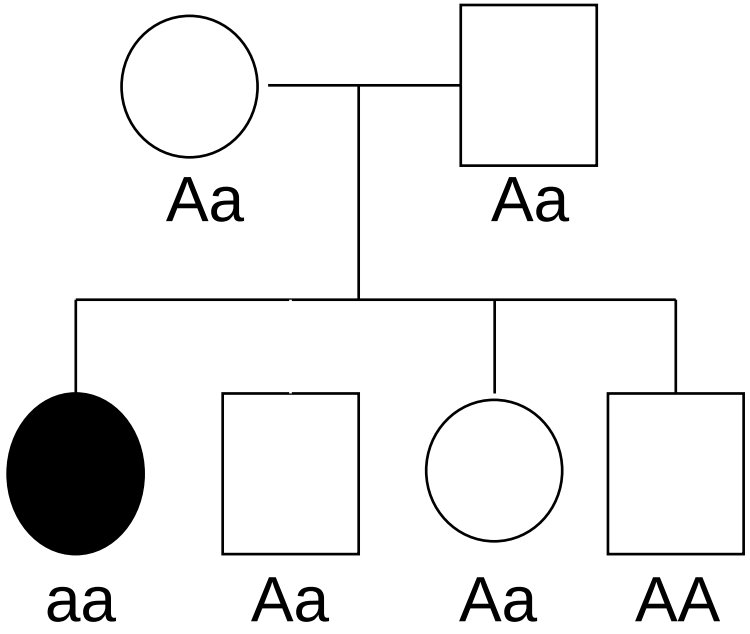


- **Phenotype expressed in homozygote**
- **Parents are heterozygous and "normal"**
- **Males and females equally at risk**
- **Two carriers have a 25% risk of producing an affected child**
- **Many ethnic groups have clusters of disease**
- **New mutations very unusual**

# Autosomal Recessive

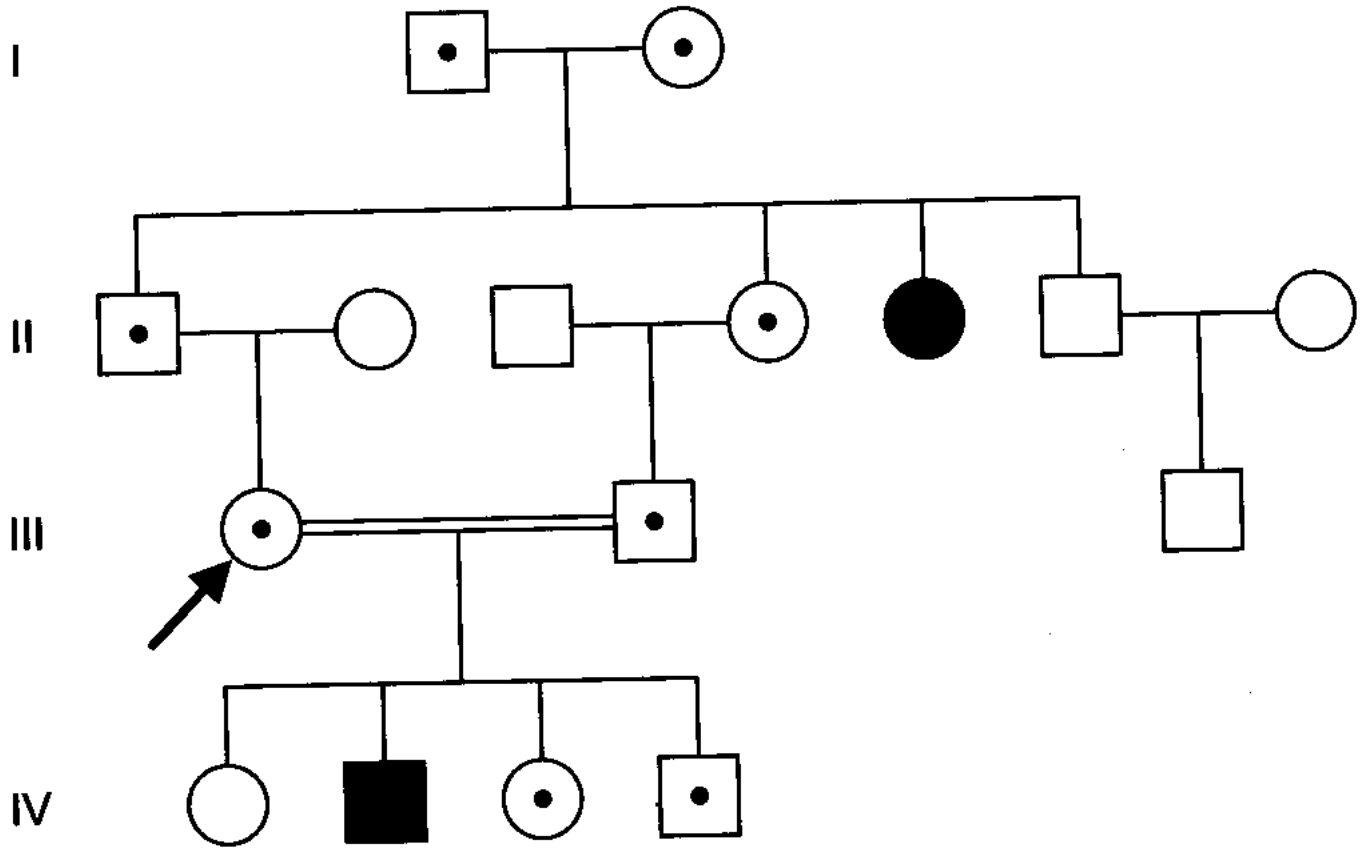

# Example: Oculocutaneous Albinism (OCA)

- **A child affected with OCA Type 1 is usually homozygous for a mutation in the gene encoding tyrosinase, which is an enzyme necessary for the production of melanin**
- **Characterized by total or nearly total absence of cutaneous and ocular pigmentation**

# Pleiotropic effects resulting from tyrosinase deficiency in albinism

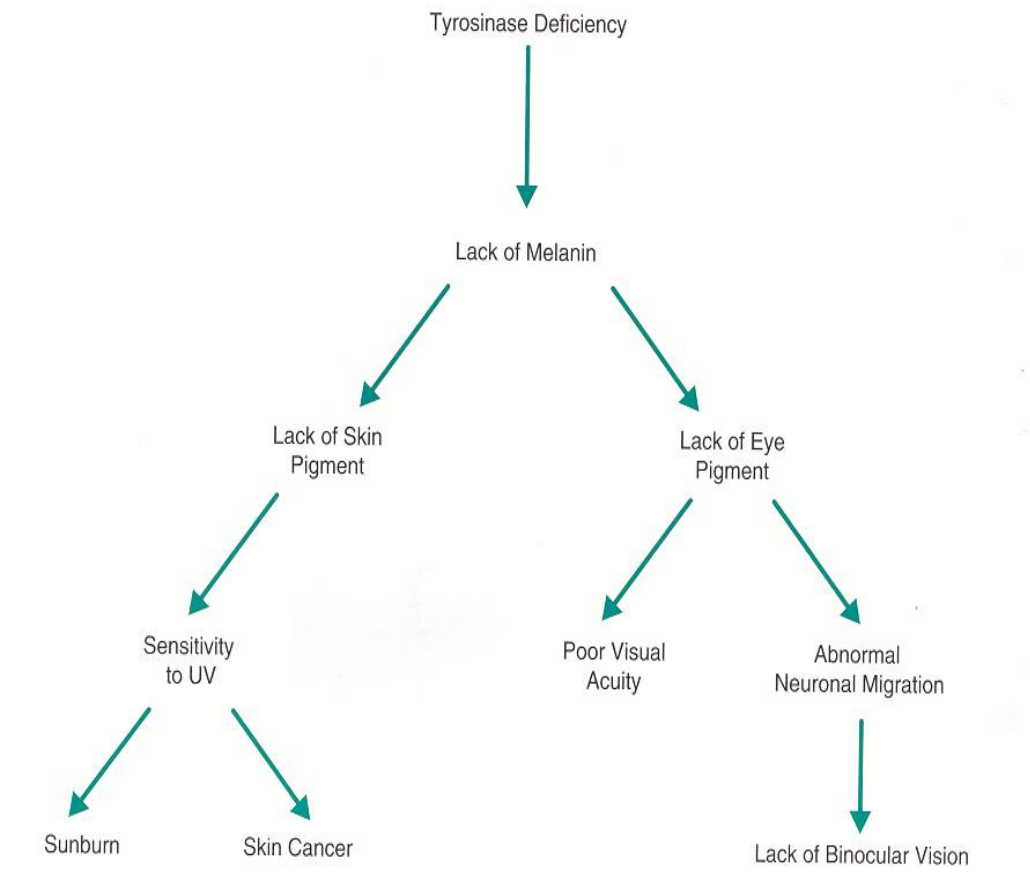


**Pleiotropic gene- A gene that causes a number of distinct phenotypic effects**

# Other Common Autosomal Recessive Diseases

- **Cystic fibrosis -- ~1/3,600 Whites**
  - **Condition causing abnormally thick, sticky secretions in the glands that produce mucus, tears, sweat, saliva and digestive juices**
- **Gaucher's disease -- 1/1,000 (Ashkenazi Jews) 1/50,000**
  - **Associated with hematological abnormalitie with hypersplenism, bone lesions, and skin pigmentation**
- **PKU (Maternal PKU) -- 1/20,000**
  - **Resulting from a deficiency of phenylalanine hydroxylase and characterized by mental retardation**

# X-Linked Recessive Inheritance

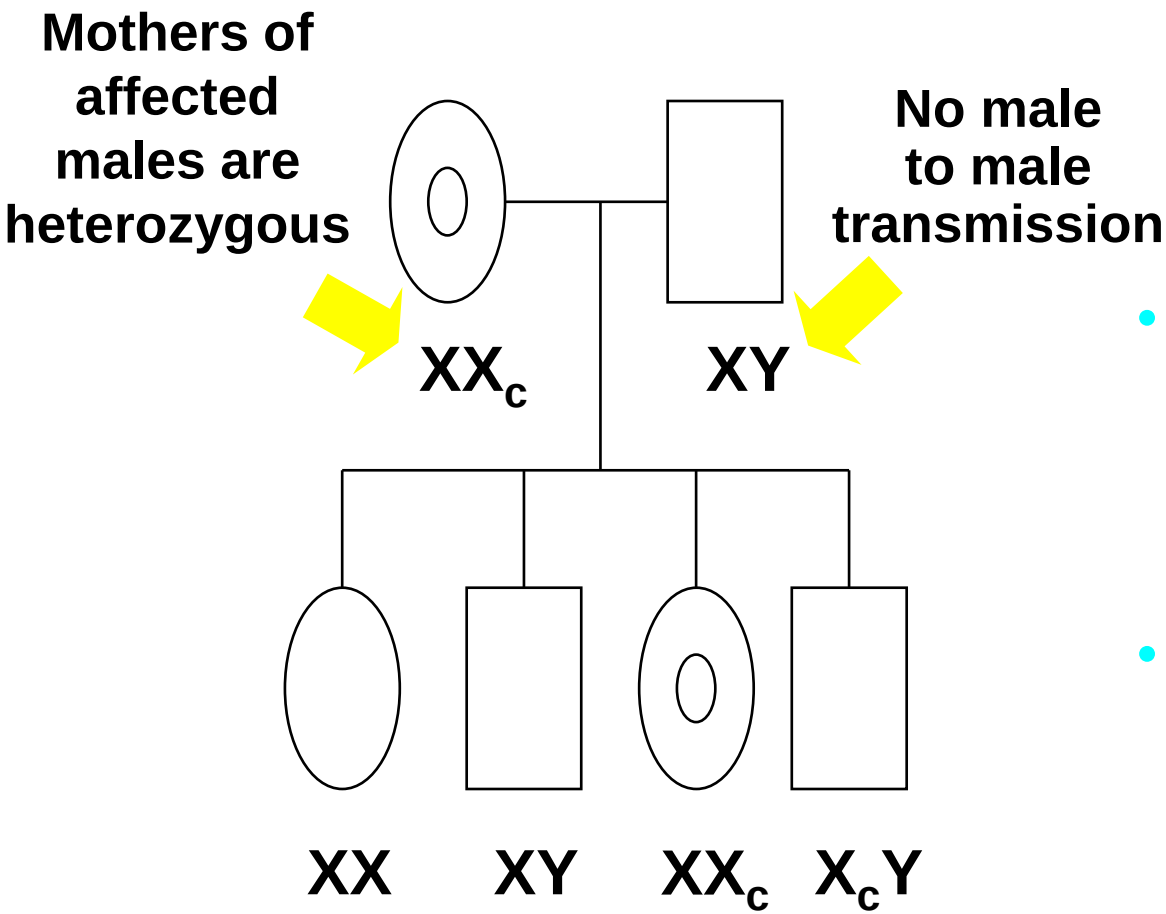


- Primarily affects males
- Carrier females pass trait to half their sons and carrier status to half their daughters
- Phenotype generally expressed in hemizygous individuals
- Affected males are at risk of transmitting the disorder to their grandsons through their obligate carrier daughters

# Example: Duchenne Muscular Dystrophy

eggs

sperm

| | $X$ | $X_c$ |
|---|---|---|
| $X_c$ | $X_cX$ | $X_cX_c$ |
| $Y$ | $X\ Y$ | $X_cY$ |

- **Characterized by progressive loss of muscle strength**
- **Caused by a mutation in the gene that produces an important muscle protein, dystrophin**
- **Affected males are <u>hemizygous</u> for the mutation**
- **Affected females are <u>homozygous (affected)</u> for the mutation**

# Other Common X-linked Recessive Diseases

- **Hemophilia A and B ~1/10,000**
  - **Bleeding disorder caused by a deficiency in the activity of coagulation factor VIII or IX**
  - **Some carriers bleed, frequency 1/10,000**
- **G-6-PD deficiency -- ~1/500 African Americans**
  - **An enzyme deficiency of the red blood cells leading to hemolytic anemia**
- **Ocular Albinism -- ~ 1/180,000**
  - **Ethnicity dependent ?**
  - **Eyes lack melanin pigment, while the skin and hair show normal or near-normal coloration**

# Pedigree of the Royal Family (Queen Victoria): Hemophilia

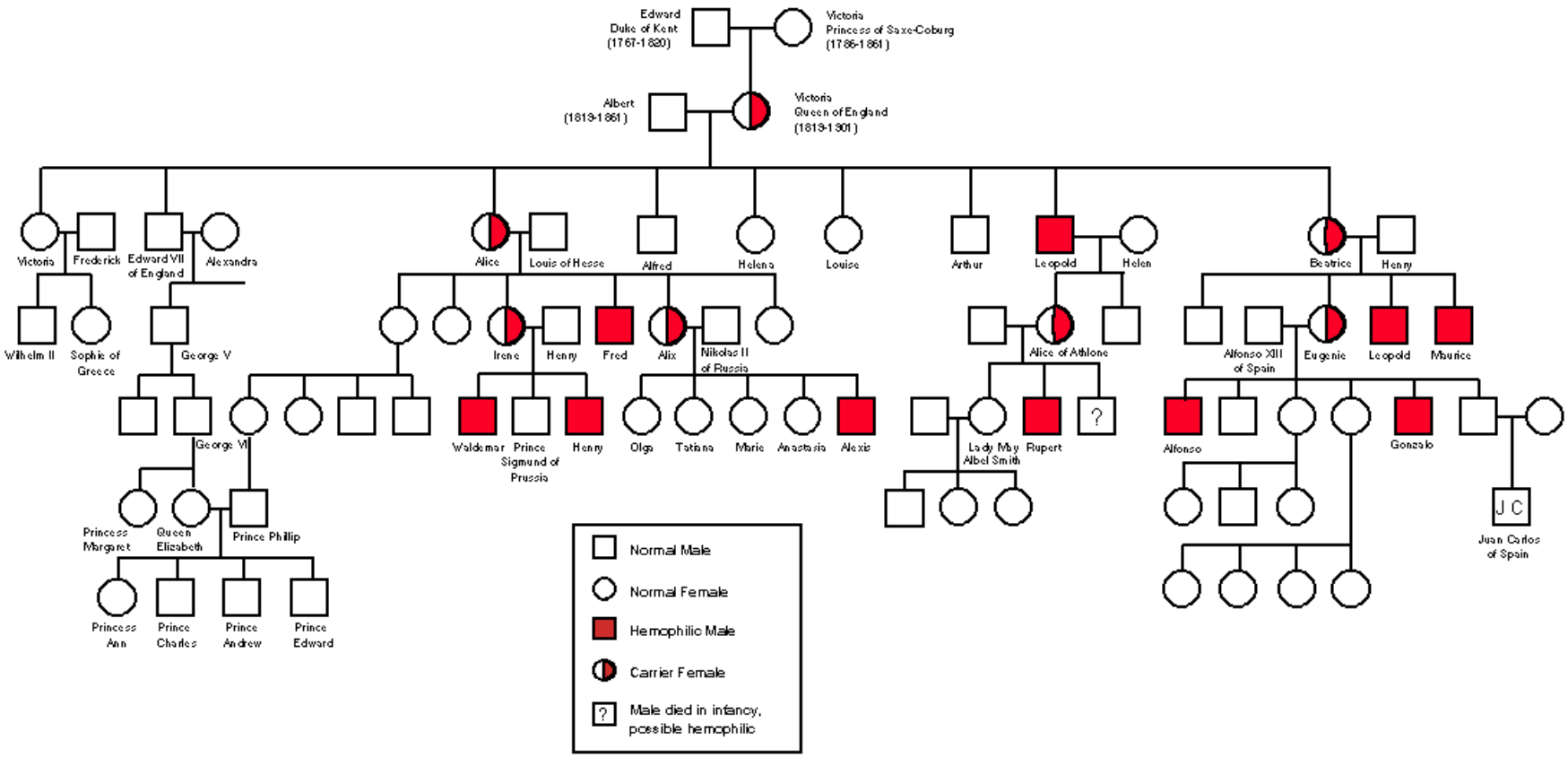

# X-linked Dominant Inheritance

All daughters from affected males are affected

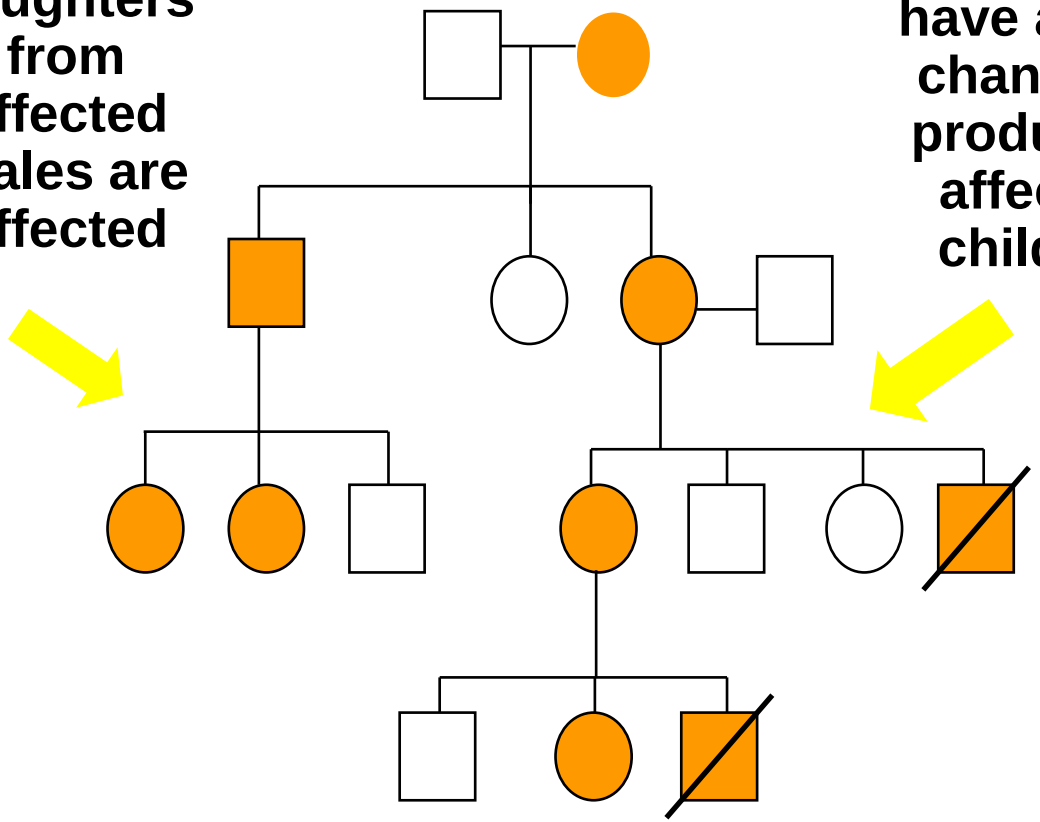

Affected mothers have a 50% chance of producing affected children

- Affects either sex, but far more females than males
- There are frequently an excess of live born females (affected male mortality)
- Sons of affected males never inherit the disorder
- Affected females can transmit the disorder to offspring of both sexes

# X-linked Dominant Diseases

- **Charcot-Marie-Tooth Disease (CMT)**
  - **Associated with weakness and atrophy of muscles of hands and lower legs, with foot deformities and some loss of sensation in feet**
- **Coffin-Lowry Syndrome**
  - **(Soft hand syndrome) associated with mental and somatic retardation & large soft hands, and various bone abnormalities**
- **Hypophosphatemia -- ~1 in 20,000 people**
  - **Associated with Vitamin D Resistant Rickets**

# Hypophosphatemia: X-linked Dominant Trait

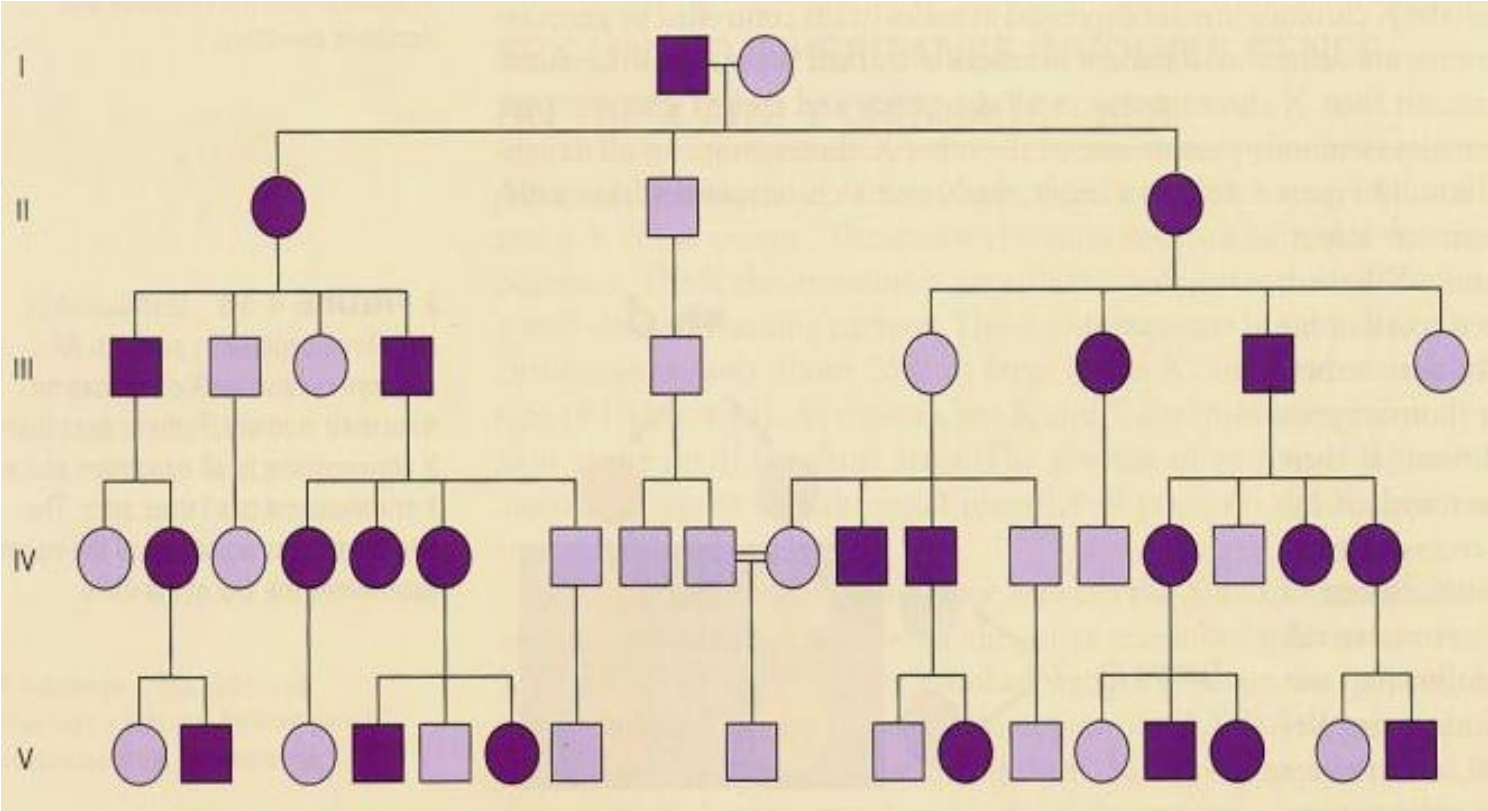

# Y-Linked Traits

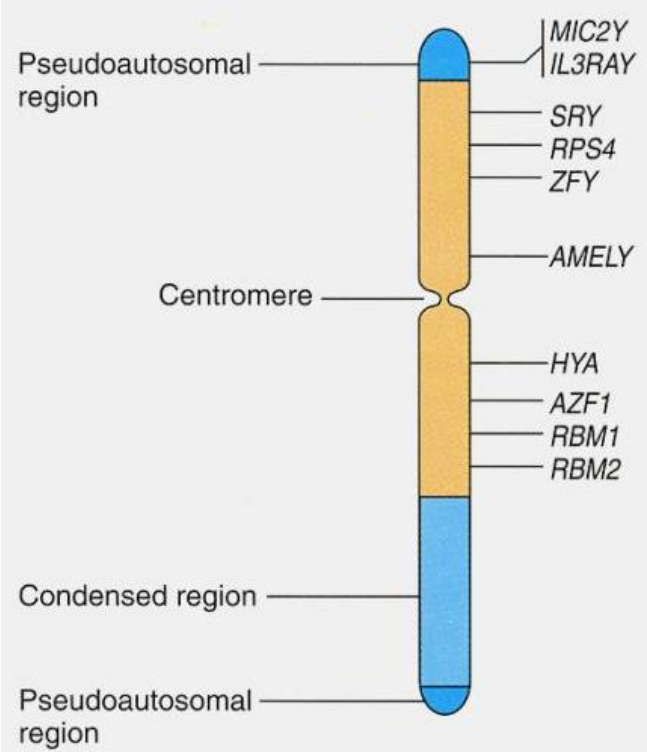


- Hemizygous – always expressed
- Phenotype expressed in males (no affected females)
  - NO daughters of affected father affected
- Affected sons have affected fathers
- ALL sons of affected father will be affected
  - If you have it and your “son” doesn’t, then he isn’t yours!
- Very rare - only ~ 3 dozen known

# Idealized Y-Linked Pedigree

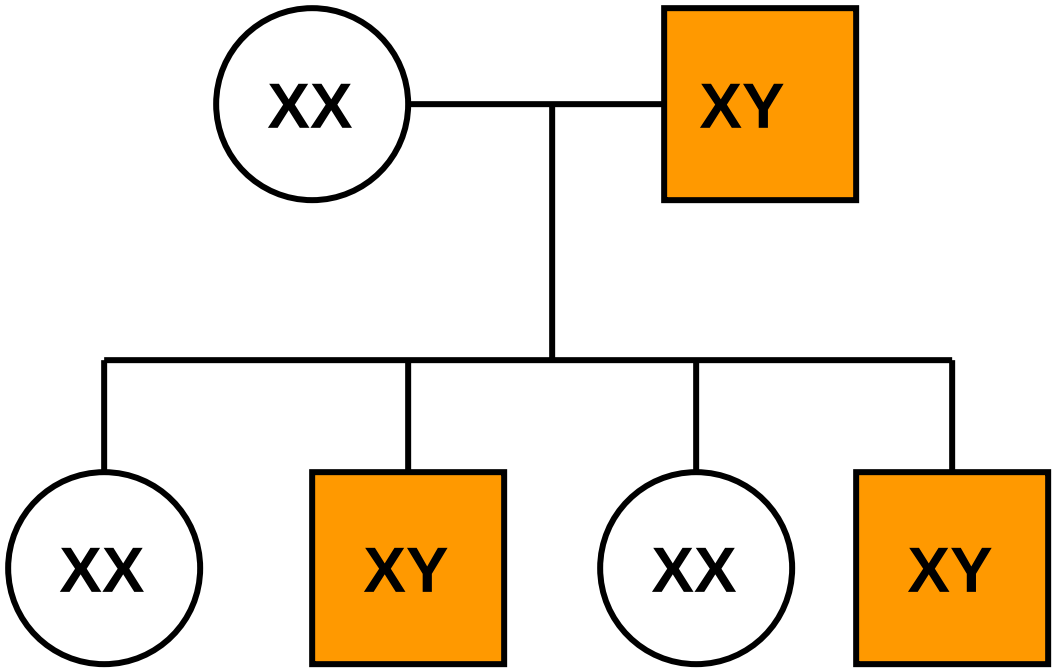

# Genetic Association

- **Genetic association can be defined as the association between an allele at a particular genetic marker (locus) and a phenotype (disease).**
- **The association is observed between an allele and a disease, can be shown and interpreted in the following figure**

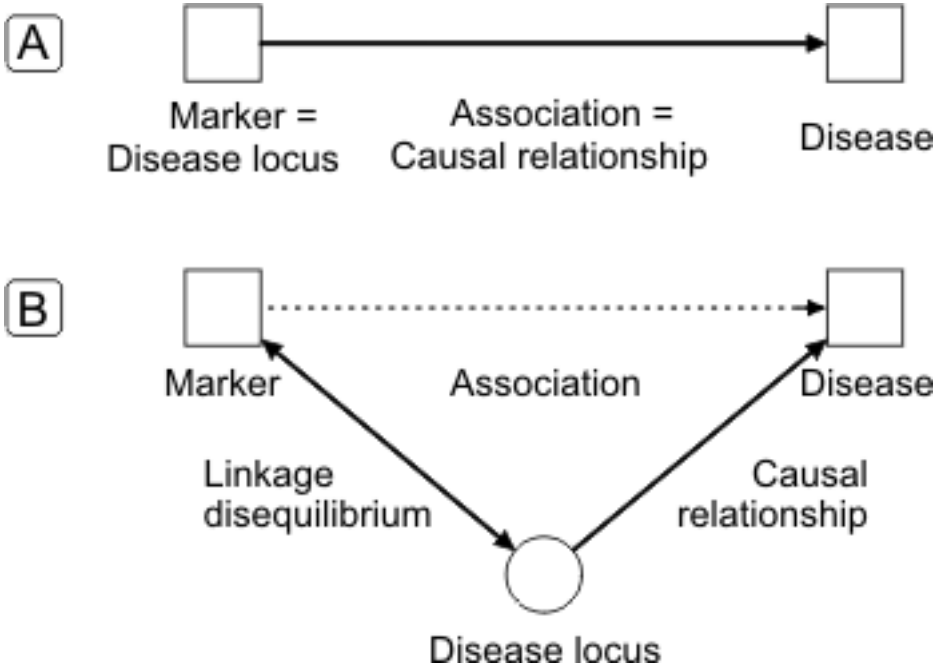


**Fig. 1: Causal models for genetic association. In direct association (A), the marker locus is identical to the disease locus. In indirect association (B), the marker locus is in linkage disequilibrium with the disease locus.**

# Study Designs for Association

- **To study genetic association, a broad distinction can be made between studies utilizing data from unrelated individuals and those based on family data. If unrelated individuals are recruited for the study, it will strongly resemble classical epidemiological studies. Hence, similar study designs can be employed, two of which are depicted in the figure below.**

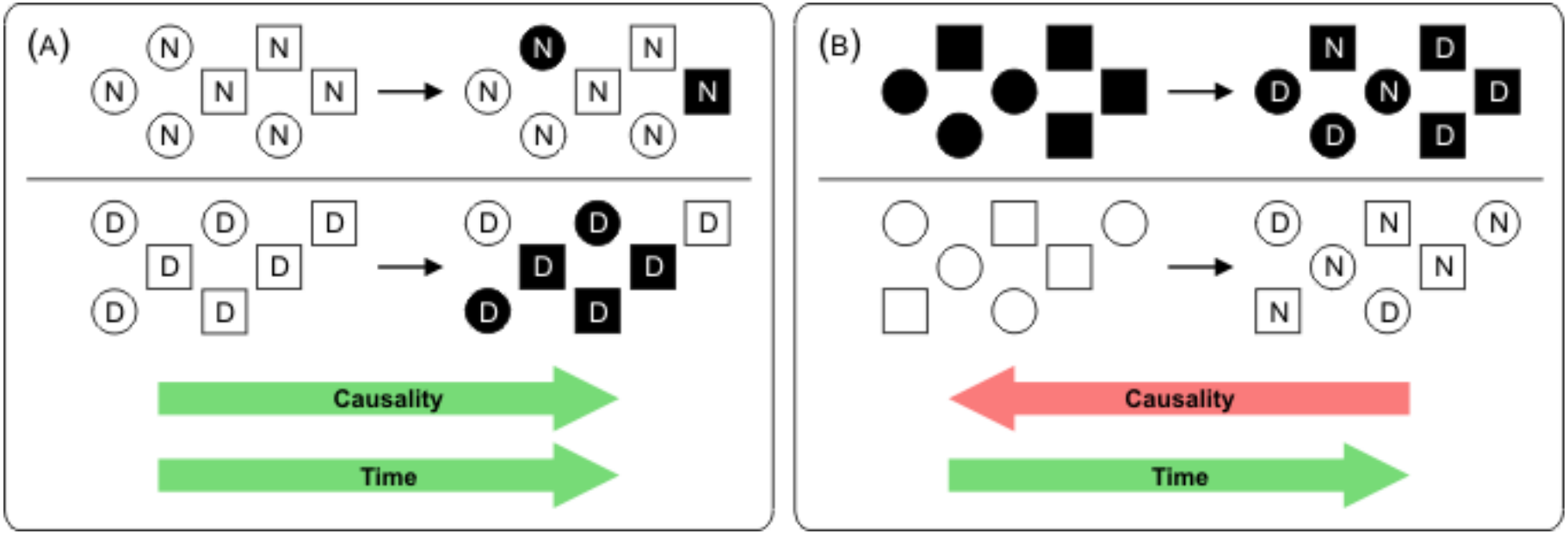


**Fig. 2: Study designs for association analysis with unrelated individuals. (A) Cohort study recruiting probands without knowledge of their disease status. (B) Case-control study recruiting probands according to their disease status.**

# Study Designs for Association

- **Cohort Study:** **a sample of probands - a cohort - is recruited without knowledge of their disease status, ideally prior to anyone developing the disease.**

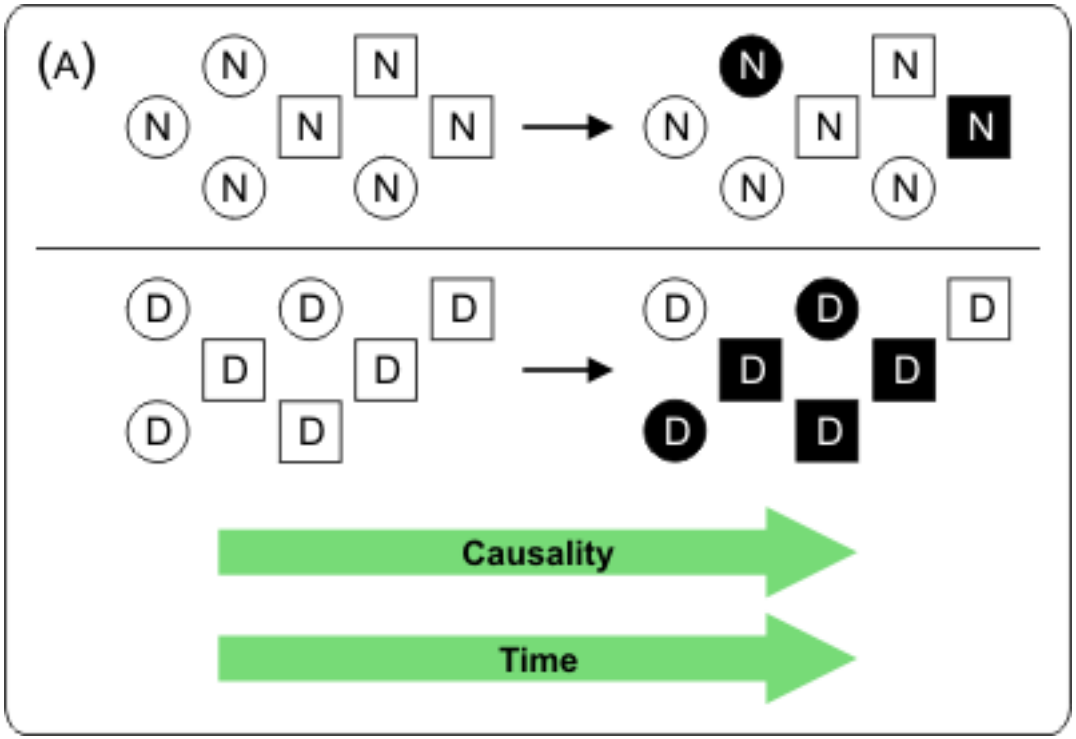


**Fig. 3: Study design (A) for association analysis with unrelated individuals: Cohort study recruiting probands without knowledge of their disease status.**

# Study Designs for Association

- **Case-Control Study:** a sample of affected and unaffected individuals, the cases and the controls, are recruited. These are then analyzed with respect to their genetic status.

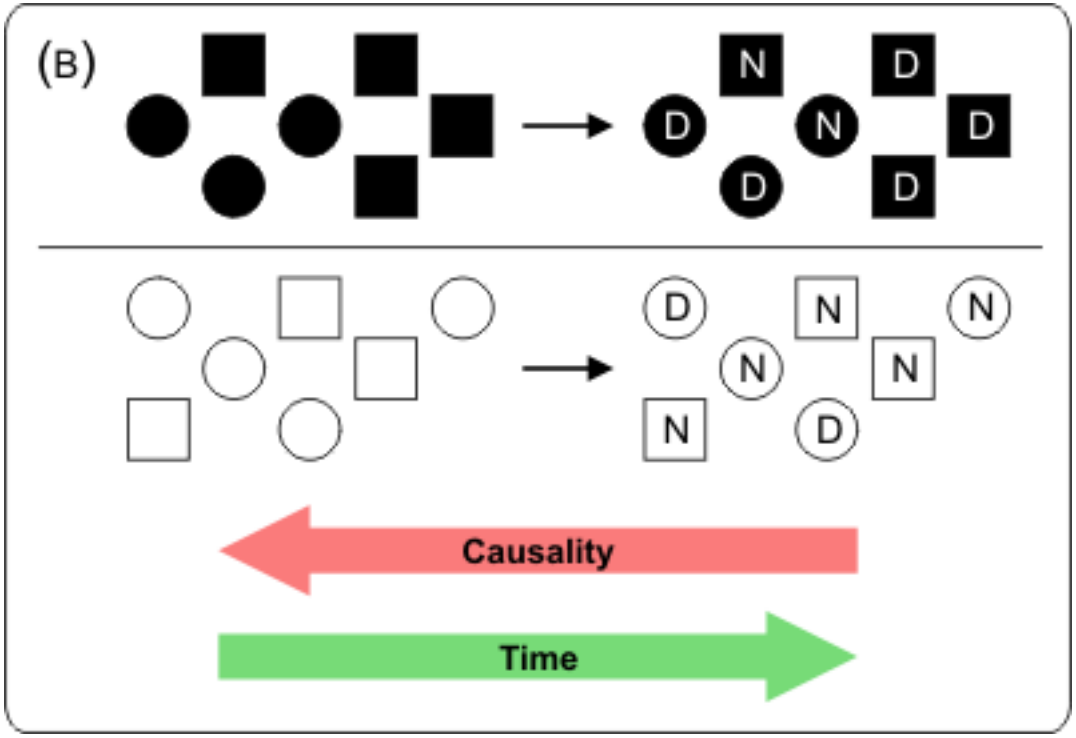


**Fig. 4: Study design (B) for association analysis with unrelated individuals: Case-control study recruiting probands according to their disease status.**